STB11N52K3, STF11N52K3 STP11N52K3

N-channel 525 V, 0.41 Ω, 10 A SuperMESH3™ Power MOSFET in D²PAK,TO-220FP and TO-220 packages

Datasheet — production data

Features

Order codes	V_{DSS}	$R_{DS(on)}$ max.	I_D	P_w
STB11N52K3	525 V	< 0.51 Ω	10 A	125 W
STF11N52K3				30 W
STP11N52K3				125 W

- 100% avalanche tested
- Extremely high dv/dt capability
- Gate charge minimized
- Very low intrinsic capacitance
- Improved diode reverse recovery characteristics
- Zener-protected

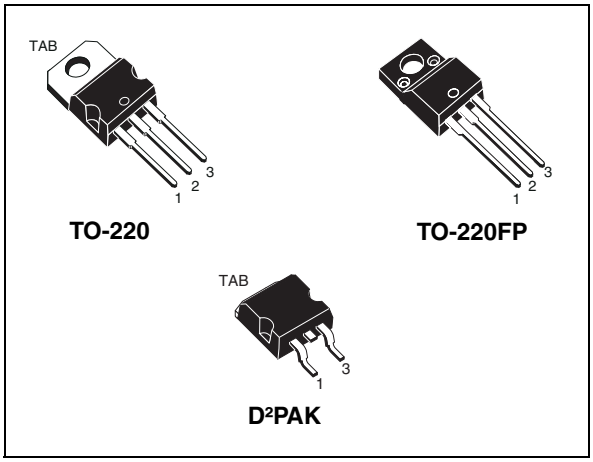

Figure 1. Internal schematic diagram

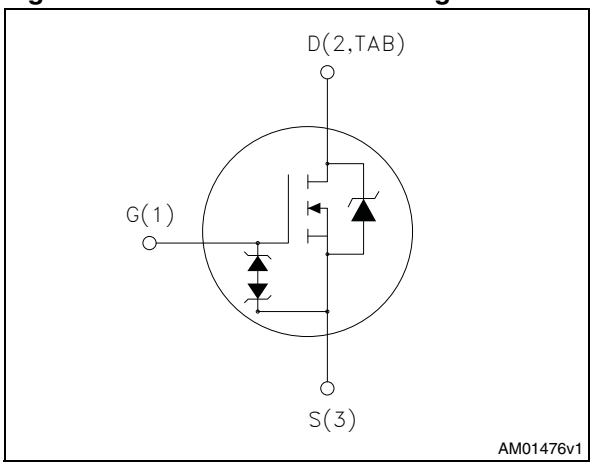

Applications

- Switching applications

Description

These devices are N-channel Power MOSFETs made using the SuperMESH3™ technology that is obtained via improvements applied to STMicroelectronics' SuperMESH™ technology combined with a new optimized vertical structure. The resulting transistor has an extremely low on resistance, superior dynamic performance and high avalanche capability, making it especially suitable for the most demanding applications.

Table 1. Device summary

Order codes	Marking	Packages	Packaging
STB11N52K3	11N52K3	D²PAK	Tape and reel
STF11N52K3		TO-220FP	Tube
STP11N52K3		TO-220	Tube

This is information on a product in full production. www.st.com

Contents

1 Electrical ratings 3

2 Electrical characteristics 4

2.1 Electrical characteristics (curves) 6

3 Test circuits 9

4 Package mechanical data 10

5 Package mechanical data 17

6 Revision history 19

1 Electrical ratings

Table 2. Absolute maximum ratings

Symbol	Parameter	Value		Unit
		TO-220, D²PAK	TO-220FP	
V_{DS}	Drain- source voltage	525		V
V_{GS}	Gate- source voltage	± 30		V
I_D	Drain current (continuous) at T_C = 25 °C	10	10 (1)	A
I_D	Drain current (continuous) at T_C = 100 °C	6	6 (1)	A
I_{DM} (2)	Drain current (pulsed)	40	40 (1)	A
P_{TOT}	Total dissipation at T_C = 25 °C	125	30	W
I_{AR}	Avalanche current, repetitive or not-repetitive (pulse width limited by T_J max)	5		A
E_{AS}	Single pulse avalanche energy (starting T_J = 25 °C, I_D = I_{AR}, V_{DD} = 50 V)	170		mJ
$V_{ESD(G-S)}$	Gate source ESD(HBM-C = 100 pF, R = 1.5 kΩ)	2500		V
dv/dt(3)	Peak diode recovery voltage slope	12		V/ns
V_{ISO}	Insulation withstand voltage (RMS) from all three leads to external heat sink (t = 1 s; Tc = 25 °C)		2500	
T_J T_{stg}	Operating junction temperature Storage temperature	- 55 to 150		°C

1. Limited only by maximum temperature allowed
2. Pulse width limited by safe operating area
3. $I_{SD} \leq 10$ A, di/dt $\leq$ 400 A/µs, V_{DD} = 80% $V_{(BR)DSS}$

Table 3. Thermal data

Symbol	Parameter	Value			Unit
		TO-220	TO-220FP	D²PAK	
$R_{thj-case}$	Thermal resistance junction-case max	1	4.17	1	°C/W
$R_{thj-amb}$	Thermal resistance junction-amb max	62.50			°C/W
$R_{thj-pcb}$	Thermal resistance junction-pcb max			30	°C/W
T_J	Maximum lead temperature for soldering purpose	300			°C/W

2 Electrical characteristics

(Tcase =25 °C unless otherwise specified)

Table 4. On /off states

Symbol	Parameter	Test conditions	Min.	Typ.	Max.	Unit
$V_{(BR)DSS}$	Drain-source breakdown voltage	I_D = 1 mA, V_{GS} = 0	525			V
I_{DSS}	Zero gate voltage drain current (V_{GS} = 0)	V_{DS} = 525 V V_{DS} = 525 V, T_C=125 °C			1 50	µA µA
I_{GSS}	Gate-body leakage current (V_{DS} = 0)	V_{GS} = ± 20 V; V_{DS}=0			±10	µA
$V_{GS(th)}$	Gate threshold voltage	V_{DS} = V_{GS}, I_D = 50 µA	3	3.75	4.5	V
$R_{DS(on)}$	Static drain-source on resistance	V_{GS} = 10 V, I_D = 5 A		0.41	0.51	Ω

Table 5. Dynamic

Symbol	Parameter	Test conditions	Min.	Typ.	Max.	Unit
C_{iss} C_{oss} C_{rss}	Input capacitance Output capacitance Reverse transfer capacitance	V_{DS} = 50 V, f = 1 MHz, V_{GS} = 0	-	1400 110 22	-	pF pF pF
$C_{oss\ eq.}$ (1)	Equivalent output capacitance	V_{DS} = 0 to 420 V, V_{GS} = 0	-	83	-	pF
R_g	Gate input resistance	f=1 MHz open drain	1	3	7	Ω
Q_g Q_{gs} Q_{gd}	Total gate charge Gate-source charge Gate-drain charge	V_{DD} = 420 V, I_D = 10 A, V_{GS} = 10 V *(see Figure 18)*	-	51 8 32	-	nC nC nC

1. $C_{oss\ eq.}$ is defined as a constant equivalent capacitance giving the same charging time as C_{oss} when V_{DS} increases from 0 to 80% V_{DS}

Table 6. Switching times

Symbol	Parameter	Test conditions	Min.	Typ.	Max	Unit
$t_{d(on)}$ t_r $t_{d(off)}$ t_f	Turn-on delay time Rise time Turn-off-delay time Fall time	V_{DD} = 210 V, I_D = 5 A, R_G = 4.7 Ω, V_{GS} = 10 V *(see Figure 17)*	-	7 18 281 42	-	ns ns ns ns

Table 7. Source drain diode

Symbol	Parameter	Test conditions	Min.	Typ.	Max	Unit
I_{SD} I_{SDM} (1)	Source-drain current Source-drain current (pulsed)		-		10 40	A A
V_{SD} (2)	Forward on voltage	I_{SD} = 10 A, V_{GS} = 0	-		1.5	V
t_{rr} Q_{rr} I_{RRM}	Reverse recovery time Reverse recovery charge Reverse recovery current	I_{SD} = 10 A, di/dt = 100 A/µs V_{DD}= 60 V *(see Figure 19)*	-	270 2700 20		ns nC A
t_{rr} Q_{rr} I_{RRM}	Reverse recovery time Reverse recovery charge Reverse recovery current	I_{SD} = 10 A, di/dt = 100 A/µs V_{DD}= 60 V T_J = 150 °C *(see Figure 19)*	-	320 3400 22		ns nC A

1. Pulse width limited by safe operating area
2. Pulsed: pulse duration = 300 µs, duty cycle 1.5%

Table 8. Gate-source Zener diode

Symbol	Parameter	Test conditions	Min.	Typ.	Max.	Unit
BV_{GSO}	Gate-source breakdown voltage	Igs=± 1 mA (open drain)	30	-	-	V

The built-in back-to-back Zener diodes have specifically been designed to enhance not only the device's ESD capability, but also to make them safely absorb possible voltage transients that may occasionally be applied from gate to source. In this respect the Zener voltage is appropriate to achieve an efficient and cost-effective intervention to protect the device's integrity. These integrated Zener diodes thus avoid the usage of external components.

2.1 Electrical characteristics (curves)

Figure 2. Safe operating area for TO-220, D²PAK

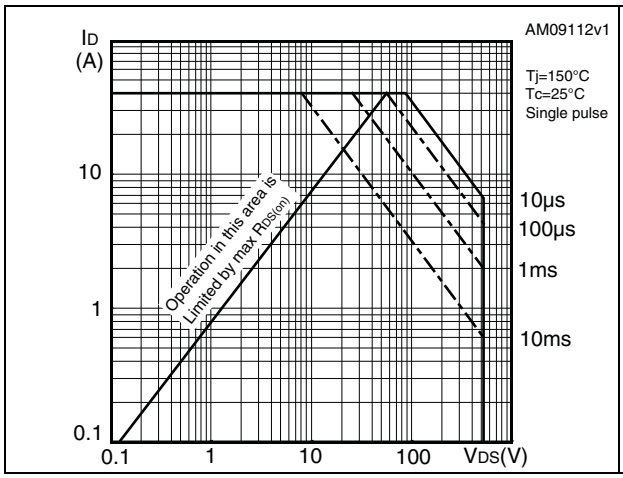

Figure 3. Thermal impedance for TO-220, D²PAK

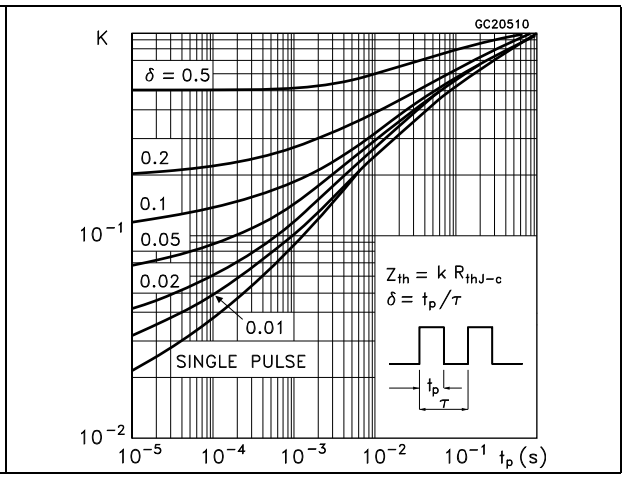

Figure 4. Safe operating area for TO-220FP

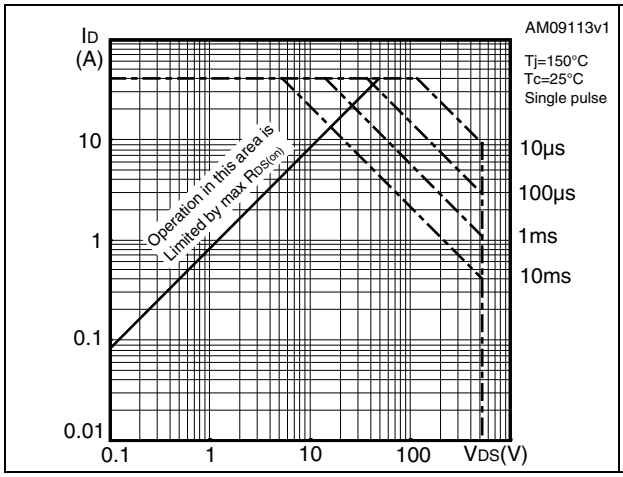

Figure 5. Thermal impedance for TO-220FP

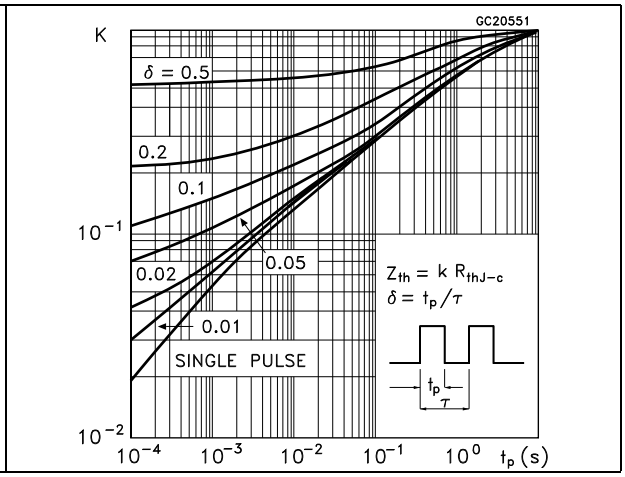

Figure 6. Output characteristics

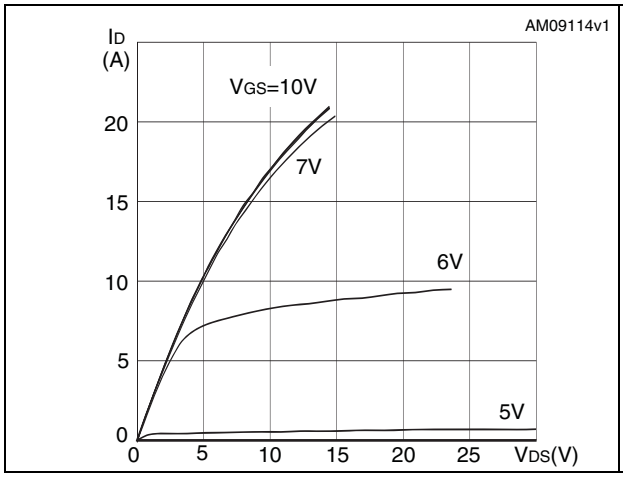

Figure 7. Transfer characteristics

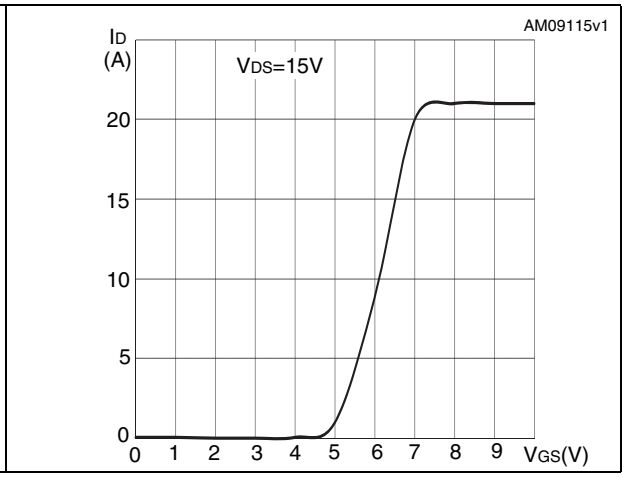

Figure 8. Gate charge vs gate-source voltage

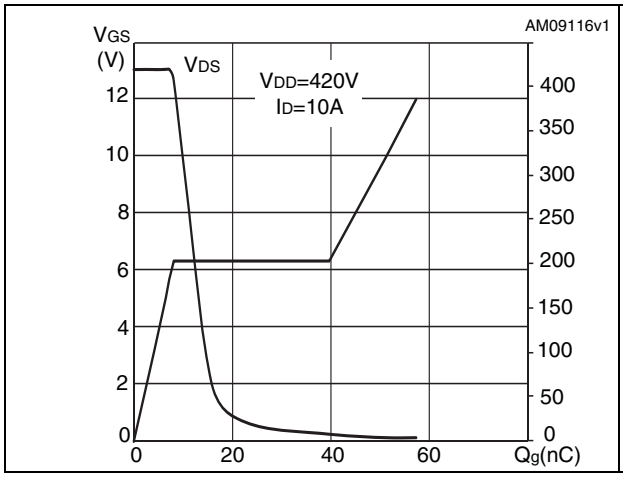

Figure 9. Static drain-source on resistance

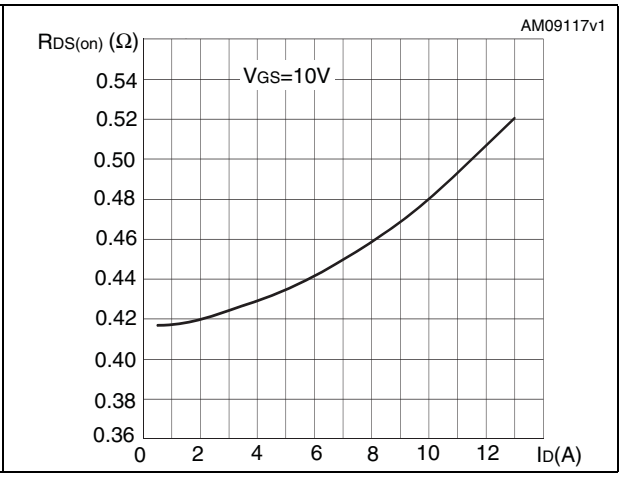

Figure 10. Capacitance variations

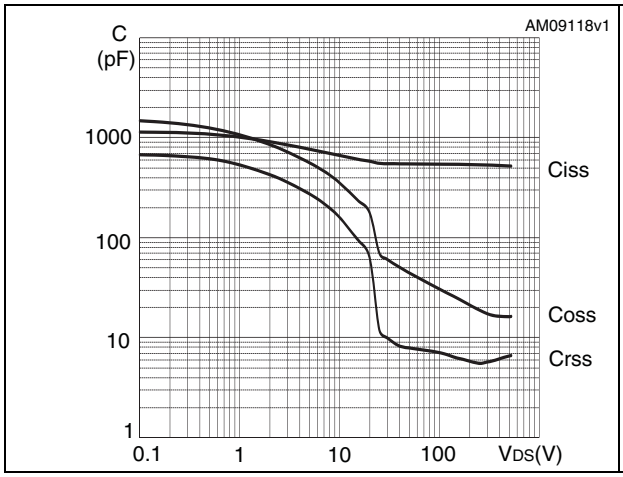

Figure 11. Output capacitance stored energy

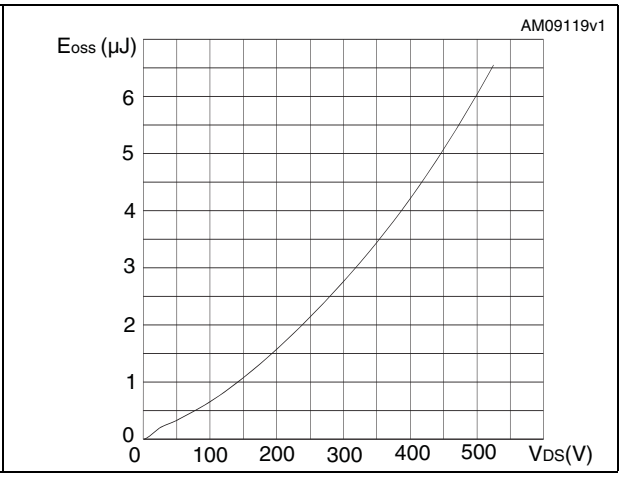

Figure 12. Normalized gate threshold voltage vs temperature

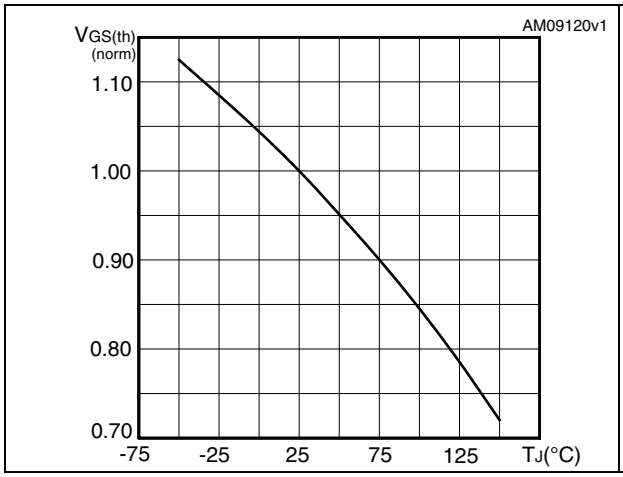

Figure 13. Normalized on resistance vs temperature

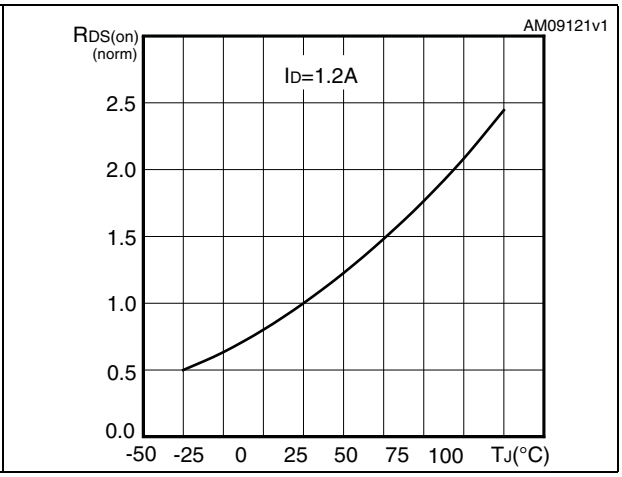

Figure 14. Source-drain diode forward characteristics

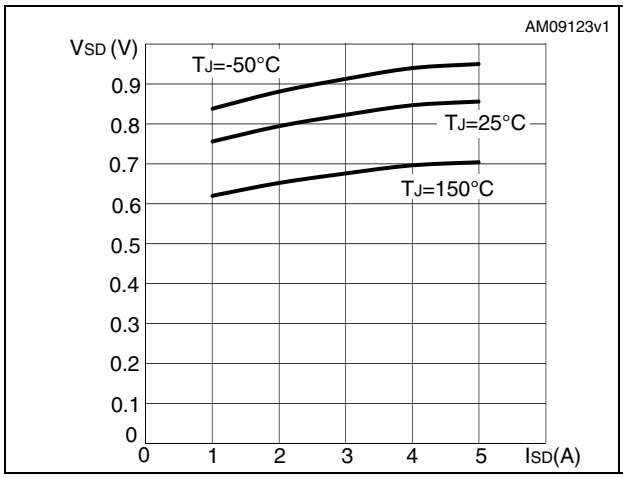

Figure 15. Normalized B_{VDSS} vs temperature

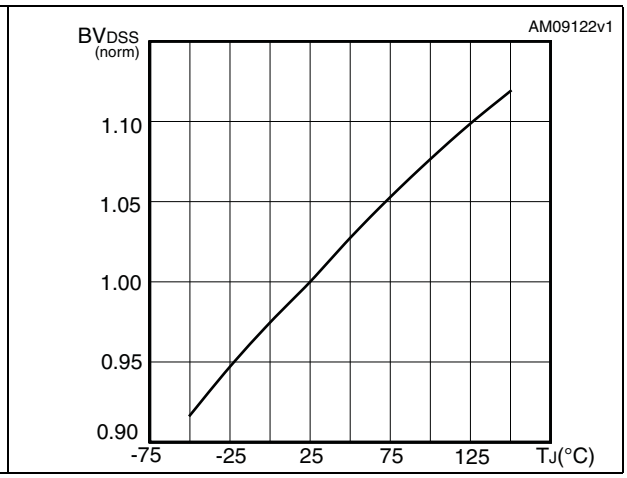

Figure 16. Maximum avalanche energy vs starting Tj

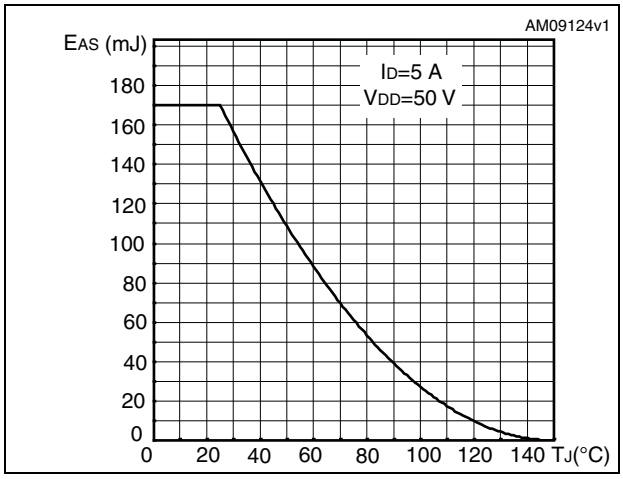

3 Test circuits

Figure 17. Switching times test circuit for resistive load

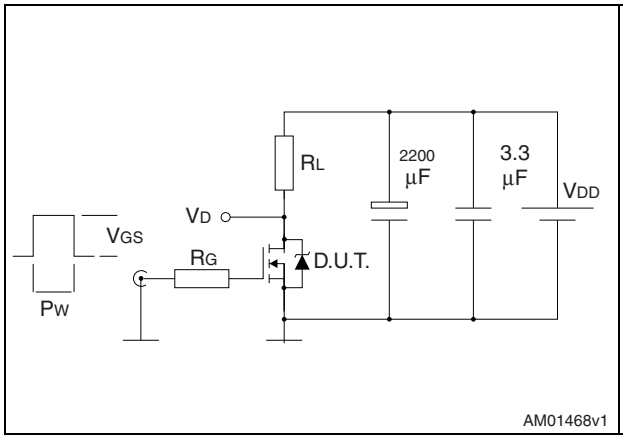

Figure 18. Gate charge test circuit

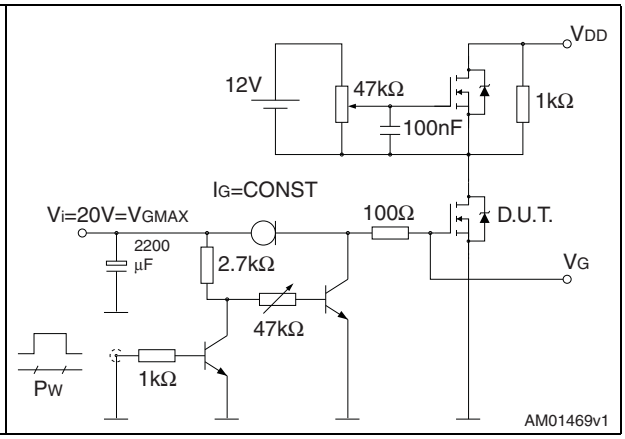

Figure 19. Test circuit for inductive load switching and diode recovery times

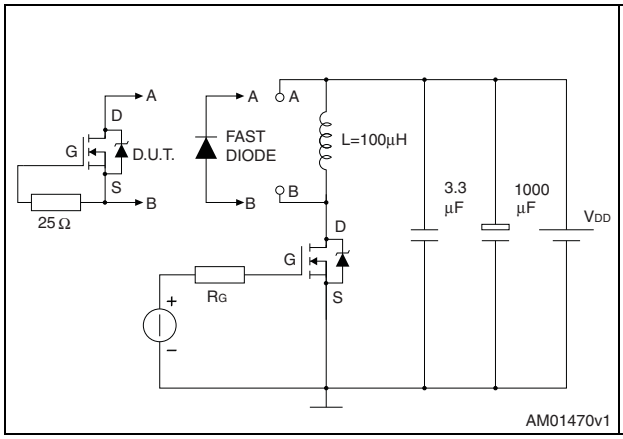

Figure 20. Unclamped inductive load test circuit

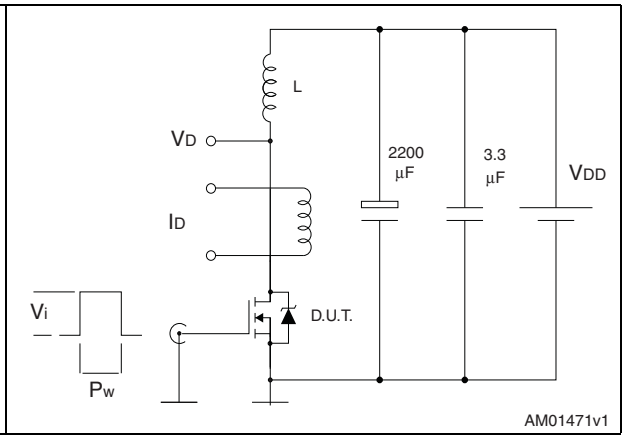

Figure 21. Unclamped inductive waveform

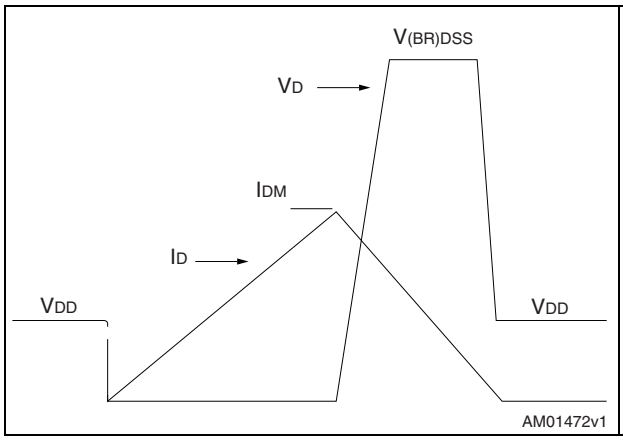

Figure 22. Switching time waveform

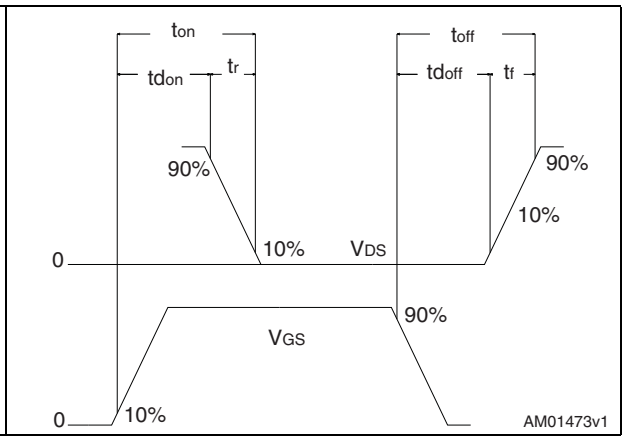

4 Package mechanical data

In order to meet environmental requirements, ST offers these devices in different grades of ECOPACK® packages, depending on their level of environmental compliance. ECOPACK® specifications, grade definitions and product status are available at: www.st.com. ECOPACK is an ST trademark.

Table 9. TO-220FP mechanical data

Dim.	mm		
	Min.	Typ.	Max.
A	4.4		4.6
B	2.5		2.7
D	2.5		2.75
E	0.45		0.7
F	0.75		1
F1	1.15		1.70
F2	1.15		1.70
G	4.95		5.2
G1	2.4		2.7
H	10		10.4
L2		16	
L3	28.6		30.6
L4	9.8		10.6
L5	2.9		3.6
L6	15.9		16.4
L7	9		9.3
Dia	3		3.2

Figure 23. TO-220FP drawing

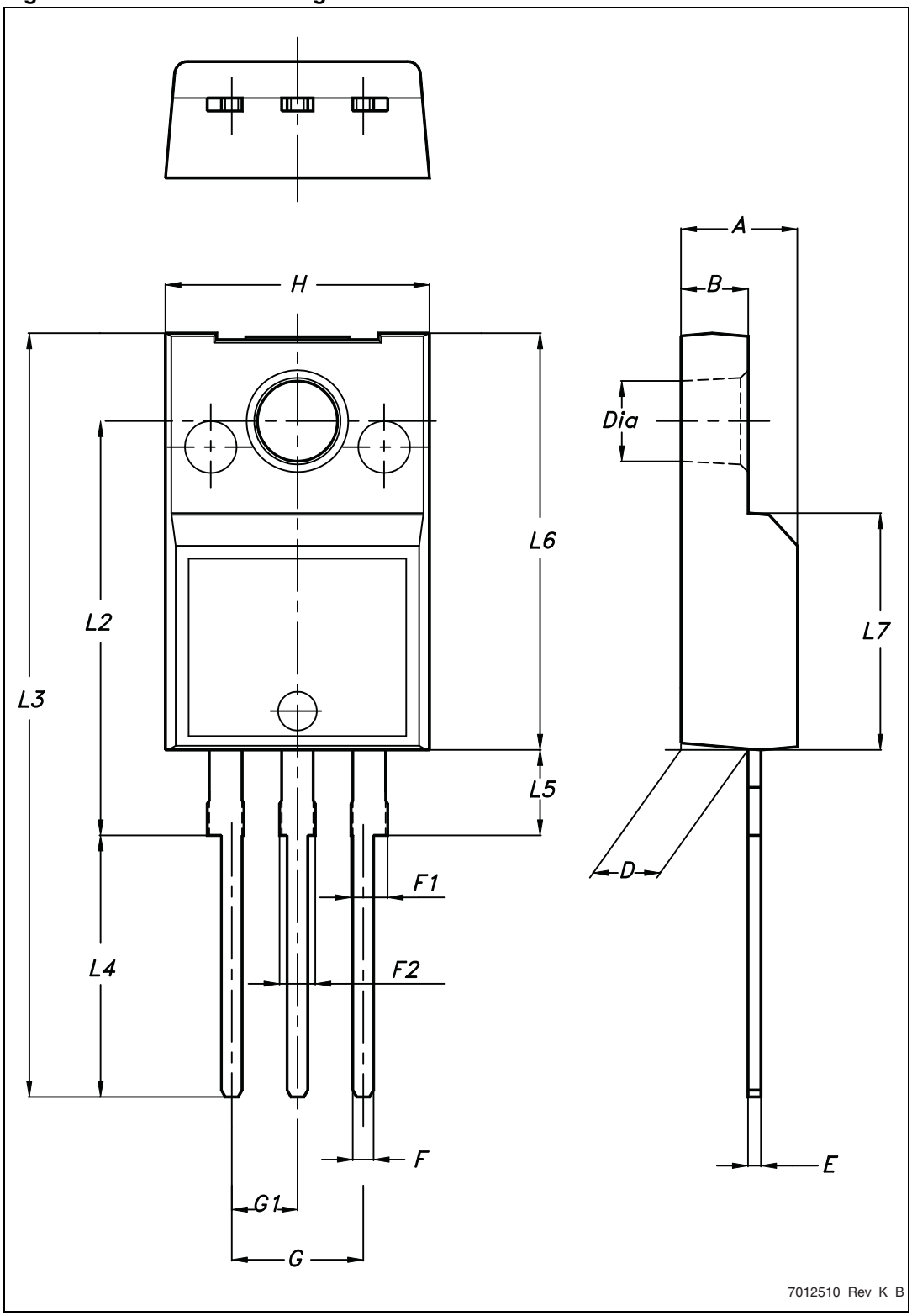

Table 10. TO-220 type A mechanical data

Dim.	mm		
	Min.	Typ.	Max.
A	4.40		4.60
b	0.61		0.88
b1	1.14		1.70
c	0.48		0.70
D	15.25		15.75
D1		1.27	
E	10		10.40
e	2.40		2.70
e1	4.95		5.15
F	1.23		1.32
H1	6.20		6.60
J1	2.40		2.72
L	13		14
L1	3.50		3.93
L20		16.40	
L30		28.90	
∅P	3.75		3.85
Q	2.65		2.95

Figure 24. TO-220 type A drawing

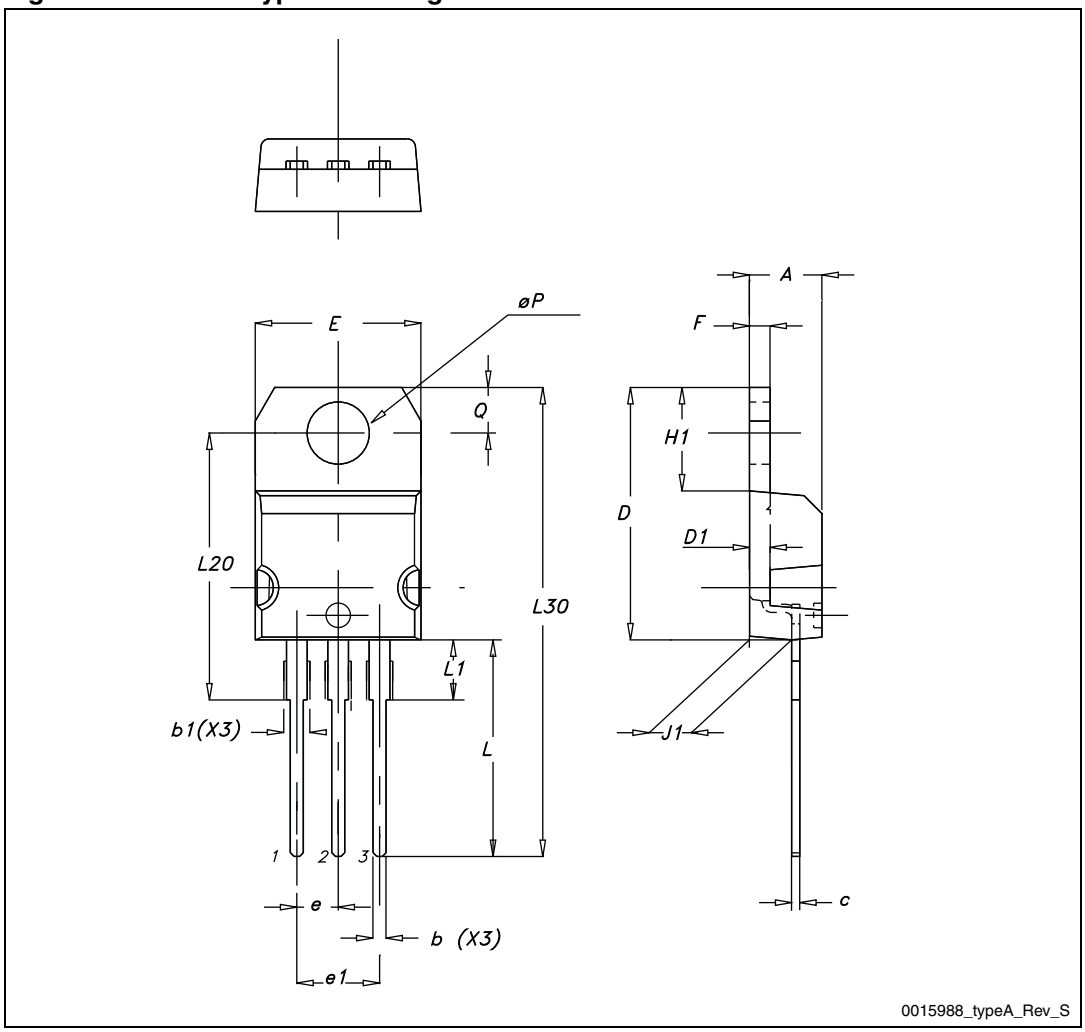

Table 11. D²PAK (TO-263) mechanical data

Dim.	mm		
	Min.	Typ.	Max.
A	4.40		4.60
A1	0.03		0.23
b	0.70		0.93
b2	1.14		1.70
c	0.45		0.60
c2	1.23		1.36
D	8.95		9.35
D1	7.50		
E	10		10.40
E1	8.50		
e		2.54	
e1	4.88		5.28
H	15		15.85
J1	2.49		2.69
L	2.29		2.79
L1	1.27		1.40
L2	1.30		1.75
R		0.4	
V2	0°		8°

Figure 25. D²PAK (TO-263) drawing

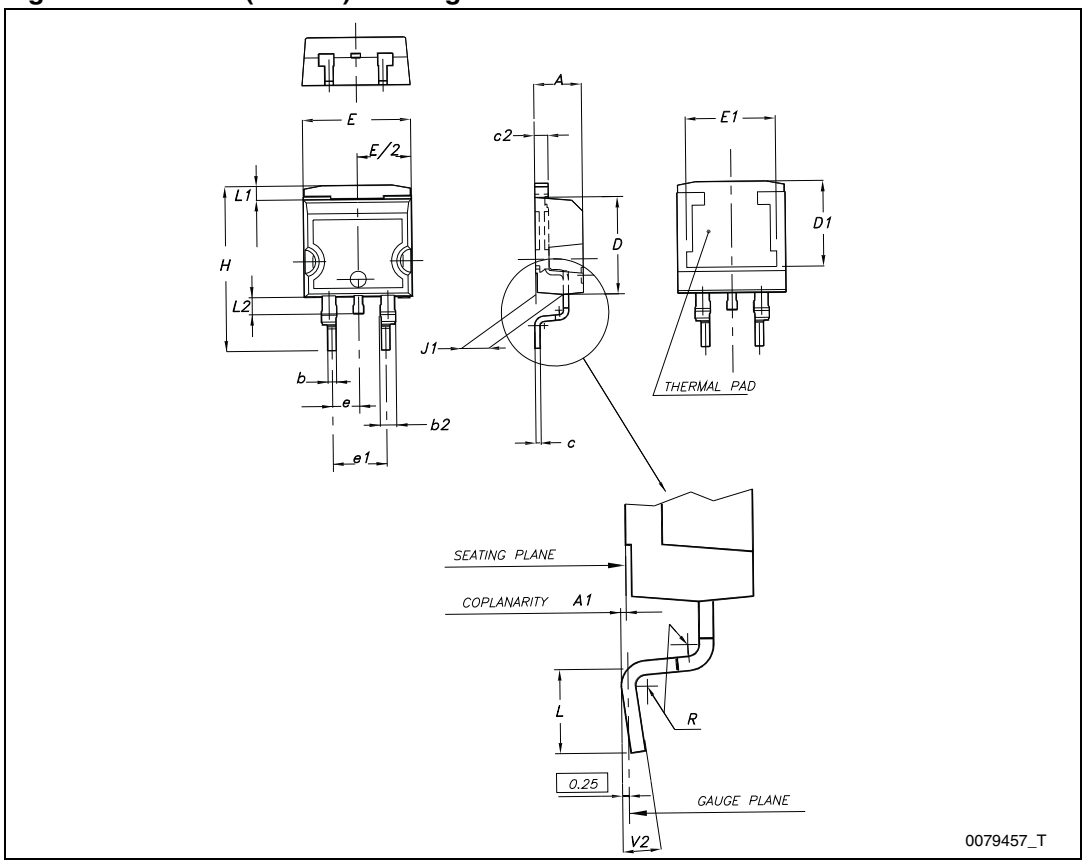

Figure 26. D²PAK footprint[a]

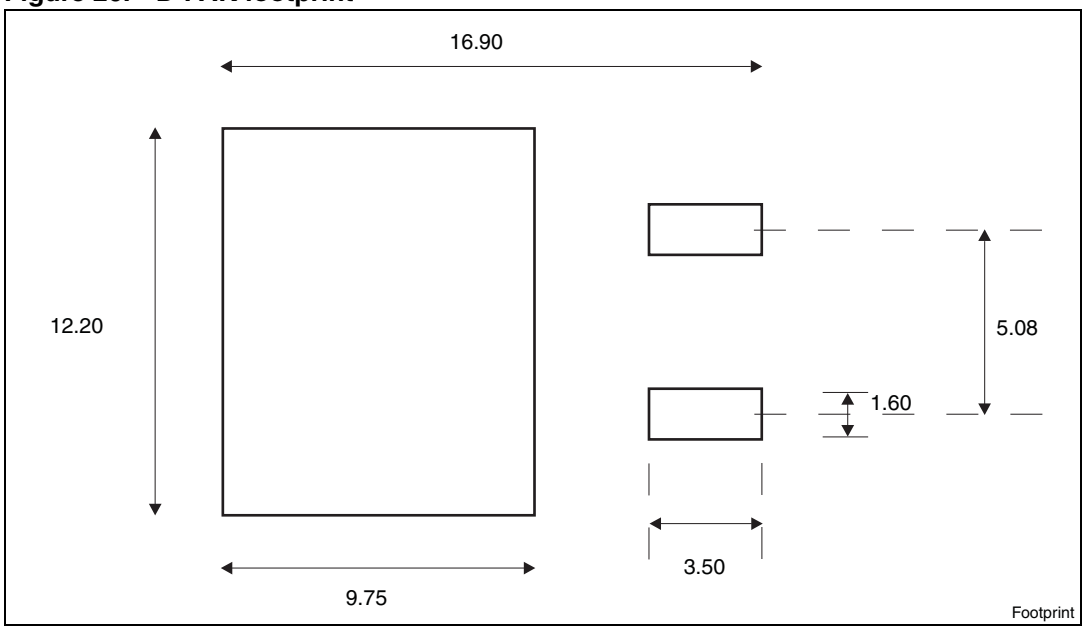

a. All dimension are in millimeters

5 Package mechanical data

Table 12. D²PAK (TO-263) tape and reel mechanical data

Tape			Reel		
Dim.	mm		Dim.	mm	
	Min.	Max.		Min.	Max.
A0	10.5	10.7	A		330
B0	15.7	15.9	B	1.5	
D	1.5	1.6	C	12.8	13.2
D1	1.59	1.61	D	20.2	
E	1.65	1.85	G	24.4	26.4
F	11.4	11.6	N	100	
K0	4.8	5.0	T		30.4
P0	3.9	4.1			
P1	11.9	12.1	Base qty		1000
P2	1.9	2.1	Bulk qty		1000
R	50				
T	0.25	0.35			
W	23.7	24.3			

Figure 27. Tape for D²PAK (TO-263)

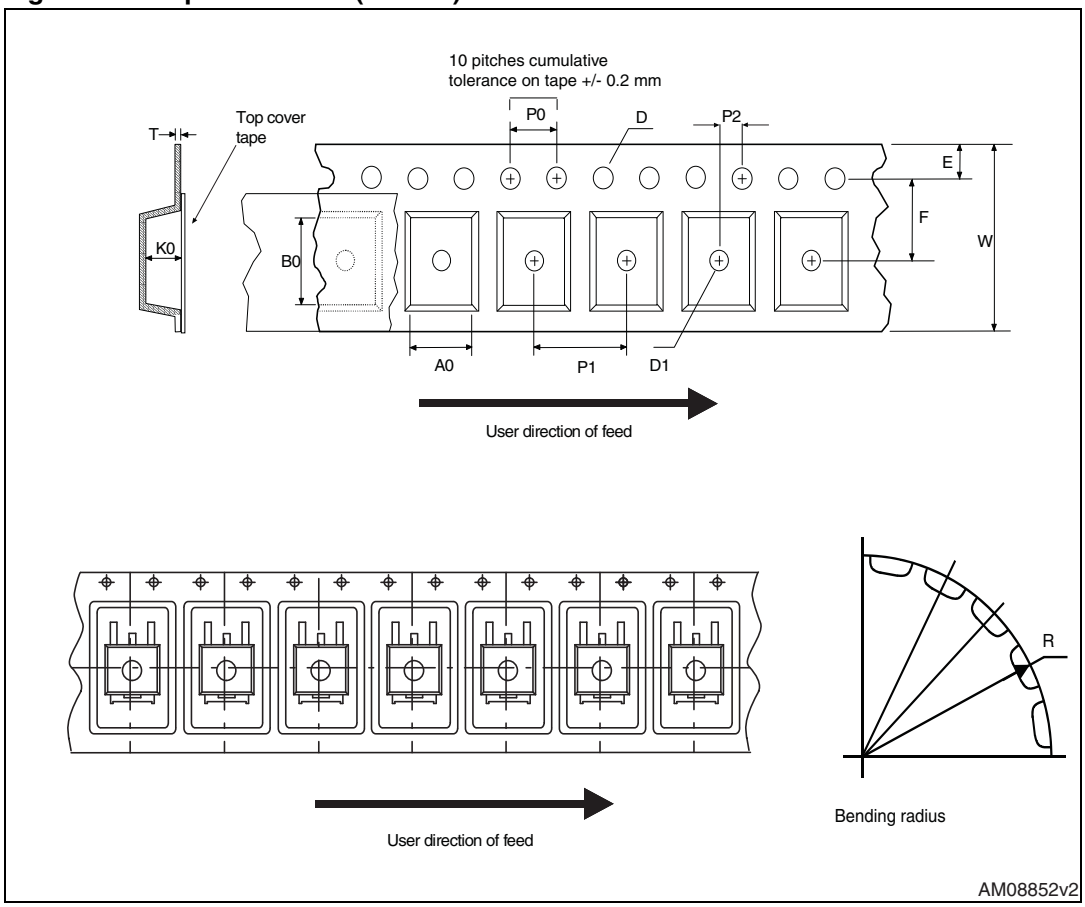

Figure 28. Reel for D²PAK (TO-263)

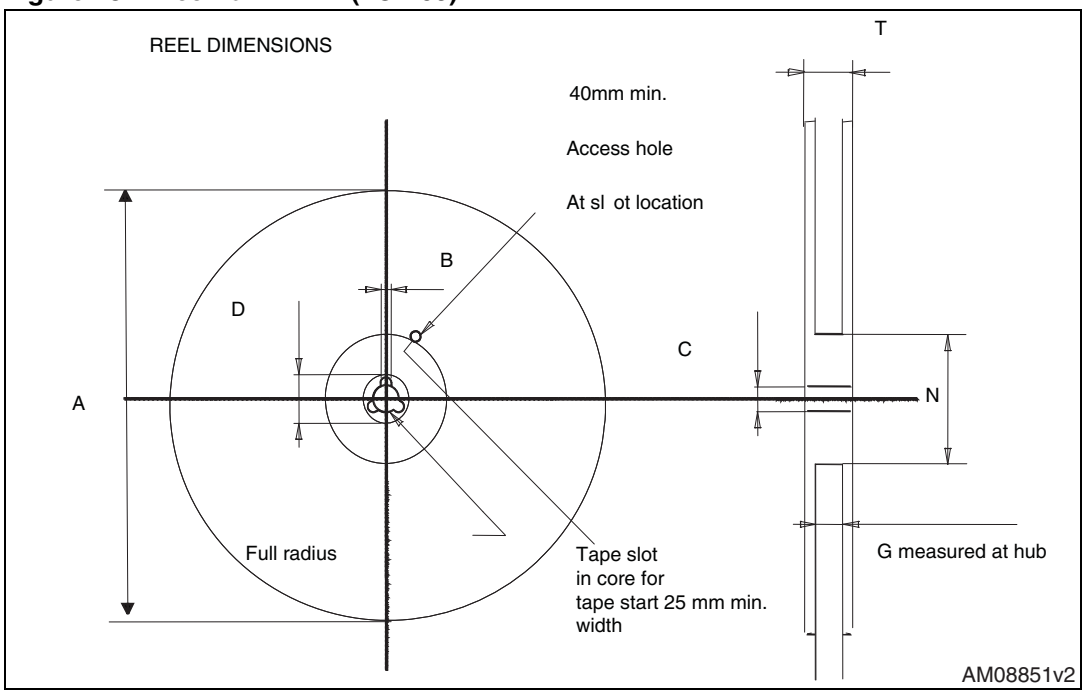

6 Revision history

Table 13. Document revision history

Date	Revision	Changes
20-May-2011	1	First release.
27-Mar-2012	2	Inserted max and min. values for R_G in *Table 5*. Updated *Section 4: Package mechanical data*.

Please Read Carefully:

Information in this document is provided solely in connection with ST products. STMicroelectronics NV and its subsidiaries (“ST”) reserve the right to make changes, corrections, modifications or improvements, to this document, and the products and services described herein at any time, without notice.

All ST products are sold pursuant to ST’s terms and conditions of sale.

Purchasers are solely responsible for the choice, selection and use of the ST products and services described herein, and ST assumes no liability whatsoever relating to the choice, selection or use of the ST products and services described herein.

No license, express or implied, by estoppel or otherwise, to any intellectual property rights is granted under this document. If any part of this document refers to any third party products or services it shall not be deemed a license grant by ST for the use of such third party products or services, or any intellectual property contained therein or considered as a warranty covering the use in any manner whatsoever of such third party products or services or any intellectual property contained therein.

UNLESS OTHERWISE SET FORTH IN ST’S TERMS AND CONDITIONS OF SALE ST DISCLAIMS ANY EXPRESS OR IMPLIED WARRANTY WITH RESPECT TO THE USE AND/OR SALE OF ST PRODUCTS INCLUDING WITHOUT LIMITATION IMPLIED WARRANTIES OF MERCHANTABILITY, FITNESS FOR A PARTICULAR PURPOSE (AND THEIR EQUIVALENTS UNDER THE LAWS OF ANY JURISDICTION), OR INFRINGEMENT OF ANY PATENT, COPYRIGHT OR OTHER INTELLECTUAL PROPERTY RIGHT.

UNLESS EXPRESSLY APPROVED IN WRITING BY TWO AUTHORIZED ST REPRESENTATIVES, ST PRODUCTS ARE NOT RECOMMENDED, AUTHORIZED OR WARRANTED FOR USE IN MILITARY, AIR CRAFT, SPACE, LIFE SAVING, OR LIFE SUSTAINING APPLICATIONS, NOR IN PRODUCTS OR SYSTEMS WHERE FAILURE OR MALFUNCTION MAY RESULT IN PERSONAL INJURY, DEATH, OR SEVERE PROPERTY OR ENVIRONMENTAL DAMAGE. ST PRODUCTS WHICH ARE NOT SPECIFIED AS "AUTOMOTIVE GRADE" MAY ONLY BE USED IN AUTOMOTIVE APPLICATIONS AT USER’S OWN RISK.

Resale of ST products with provisions different from the statements and/or technical features set forth in this document shall immediately void any warranty granted by ST for the ST product or service described herein and shall not create or extend in any manner whatsoever, any liability of ST.

ST and the ST logo are trademarks or registered trademarks of ST in various countries.

Information in this document supersedes and replaces all information previously supplied.

The ST logo is a registered trademark of STMicroelectronics. All other names are the property of their respective owners.

© 2012 STMicroelectronics - All rights reserved

STMicroelectronics group of companies

Australia - Belgium - Brazil - Canada - China - Czech Republic - Finland - France - Germany - Hong Kong - India - Israel - Italy - Japan - Malaysia - Malta - Morocco - Philippines - Singapore - Spain - Sweden - Switzerland - United Kingdom - United States of America

www.st.com